PART NO. SU1909-25

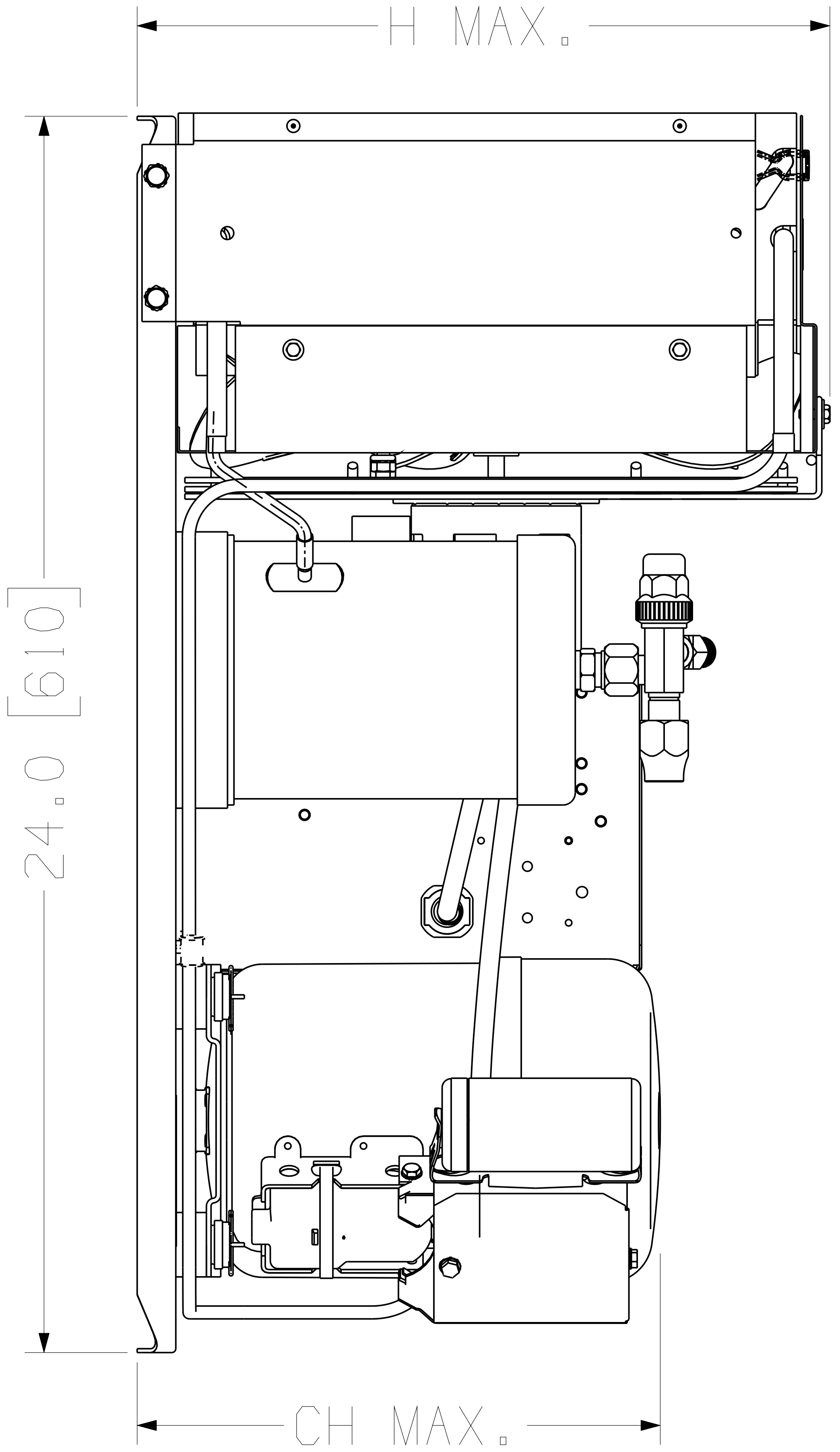

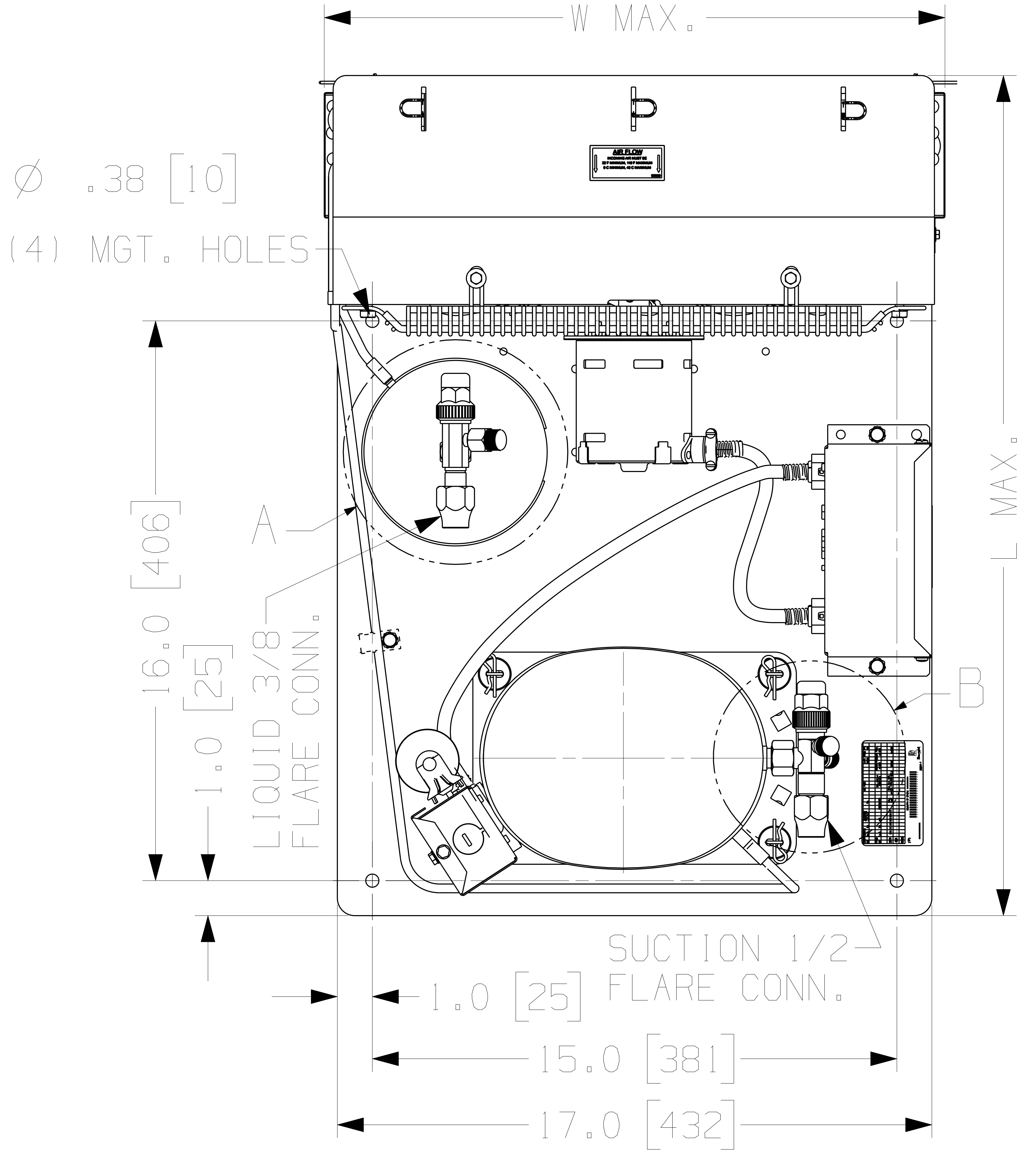

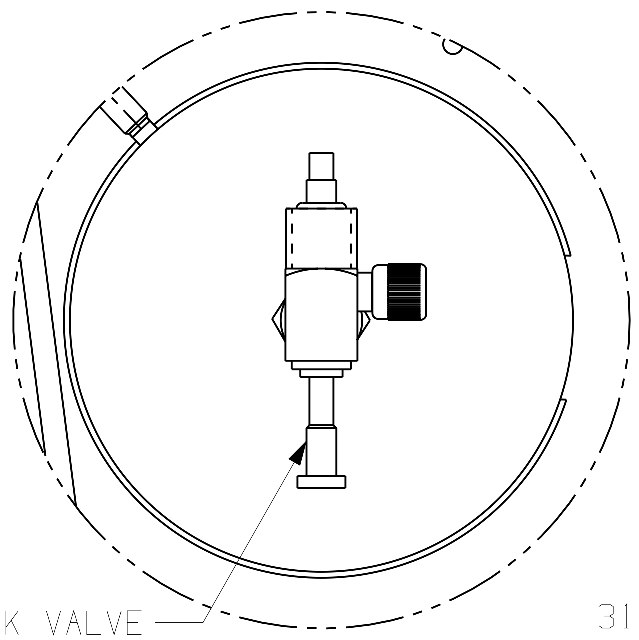

31589-1 ROTOLOCK VALVE
70111-2 TUBE PLUG
Ⓝ 31581-1 ROTOLOCK VALVE
70111-3 TUBE PLUG
Ⓟ 31555-1 ROTOLOCK VALVE

ALTERNATE A
SCALE 1:2

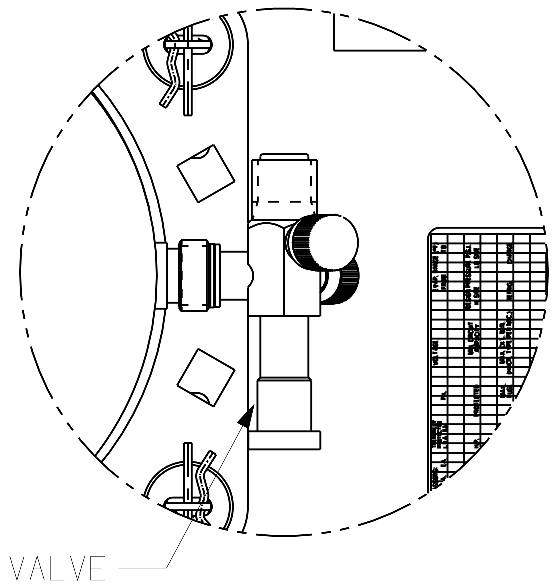

31582-1 ROTOLOCK VALVE
70111-11 TUBE PLUG

ALTERNATE B
SCALE 1:2

NOTE!
DIMENSIONING = INCHES [MILLIMETERS]

L	W	H	CH
24.3 [617]	18.0 [457]	14.0 [357]	10.2 [259]

3D,VNX6

ENGLISH

O.A. SYMBOLS

✡	= CATEGORY I
▲	= CATEGORY II
▨	= CATEGORY III
	= CATEGORY IV

AK

LT	LC	CHANGE	DATE
P	8A	EC43534 ADDED VALVE INFORMATION	TS 30JAN12
N	8A	EC41763 ADDED VALVE INFORMATION	TS 25NOV11
M	...	EC23692 REDRAWN IN 3D NO CHANGE	TS 27JAN10
K	-	EC24718 REVISED TO SHOW ALTERNATE VALVES	EAC 13APR09
J	-	#243469-002 REVISED TO MATCH DGU	LUCAS 25APR05
H	-	#242837-002 REVISED TO MATCH DGU	WRIGHT 02MAR04
G	-	REDRAWN IN NX	...
F	-	#236790-001 LIQUID TUBE REVISED	R.E.S. 05MAY98
E	-	#231384-014 CHG'D MOTOR, GUARD, SHROUD, MOUNTINGS, & CONDUIT CONN.	W.E.W. 07MAR96
D	-	#232180-043 REPLACED RECIEIVER TANK	T.M.G. 18AUG95
C	-	#232053 REVISED CONDUIT CONNECTOR AT COMPRESSOR	W.E.W. 02MAY95
B	-	#229061-9 REMOVED COMP. CODE PLATE	R.E.S. 22MAR95
A	-	#227100 REDRAWN AT SCALE 1"-3" WITH LIQUID & SUCTION CONN. SIZES ADDED	W.E.W 01APR93

THIS DRAWING OR PRINT (I) IS THE PROPERTY OF TECUMSEH PRODUCTS COMPANY (TECUMSEH) AND CONTAINS PROPRIETARY AND CONFIDENTIAL INFORMATION BELONGING TO TECUMSEH. (II) IS MADE AVAILABLE TO THE RECIPIENT ON THE EXPRESS AND SPECIFIC CONDITION THAT NEITHER IT NOR THE INFORMATION CONTAINED THEREON OR DISCLOSED THEREIN SHALL BE DISCLOSED OR MADE AVAILABLE TO OTHERS WITHOUT THE EXPRESS AND SPECIFIC WRITTEN CONSENT OF TECUMSEH AND THAT SUCH INFORMATION ONLY AS EXPRESSLY AND SPECIFICALLY APPROVED IN WRITING BY TECUMSEH AND NOT OTHERWISE. (III) SHALL NOT BE COPIED OR DUPLICATED IN ANY MANNER OR TO ANY EXTENT WITHOUT TECUMSEH'S PRIOR EXPRESS AND SPECIFIC WRITTEN CONSENT AND (IV) SHALL BE RETURNED BY THE RECIPIENT THEREOF TO TECUMSEH AT THE LATTER'S REQUEST PROMPTLY AFTER SUCH REQUEST IS MADE.

DIS.CODE

DO NOT SCALE THIS DRAWING ALL FERROUS MATERIALS MUST NOT BE MAGNETIZED AS RECEIVED OR AT COMPRESSOR ASSEMBLY.

NAME
HERMETIC CONDENSING UNIT

DWN.	CK.	APR.	SCALE
W.MURPHY 01APR93	ON FILE	ON FILE	1"=3"

THIS PRINT SUPERSEDES ALL PRINTS PRIOR TO

TECUMSEH PRODUCTS CO.
ANN ARBOR, MICHIGAN

MATERIAL
NOTED

PART NO.
SU1909-25